- About Cisco Unified MeetingPlace H.323/SIP IP Gateway Components
- Additional References for Working with Cisco Unified MeetingPlace H.323/SIP IP Gateway Software

Contents

- 1 About Cisco Unified MeetingPlace H.323/SIP IP Gateway Components
  - 1.1 Cisco Unified MeetingPlace H.323/SIP IP Gateway
    - 1.1.1 Standards That are Supported by Cisco Unified MeetingPlace H.323/SIP IP Gateway
    - 1.1.2 Protocols That Cisco Unified MeetingPlace H.323/SIP IP Gateway Uses
    - 1.1.3 Dual Tone Multi-Frequency Support by Cisco Unified MeetingPlace H.323/SIP IP Gateway
    - 1.1.4 Audio Quality During a Cisco Unified MeetingPlace Meeting
  - 1.2 Endpoints That are Supported by Cisco Unified MeetingPlace H.323/SIP IP Gateway
    - 1.2.1 How PSTN and Cisco IP Phones Communicate by Using Cisco Unified MeetingPlace H.323/SIP IP Gateway
      - 1.2.1.1 Figure: Cisco IP Phones and PSTN Phones Using Cisco Unified MeetingPlace H.323/SIP IP Gateway Software to Access the Cisco Unified MeetingPlace Audio Server System
    - 1.2.2 How H.323 Clients and Cisco SIP IP Phones Communicate by Using Cisco Unified MeetingPlace H.323/SIP IP Gateway
      - 1.2.2.1 Figure: H.323 Device and Cisco SIP IP Phone Using Cisco Unified MeetingPlace H.323/SIP IP Gateway Software to Access the Cisco Unified MeetingPlace Audio Server System
- 2 Additional References for Working with Cisco Unified MeetingPlace H.323/SIP IP Gateway Software

About Cisco Unified MeetingPlace H.323/SIP IP Gateway Components

Supporting up to 960 IP connections, Cisco Unified MeetingPlace H.323/SIP IP Gateway works with the Cisco Unified MeetingPlace Audio Server system to provide meeting access to callers.

To deploy Cisco Unified MeetingPlace H.323/SIP IP Gateway, your network must have following system components:

- Cisco Unified MeetingPlace Audio Server system to provide conferencing functionality.
- Endpoints that are supported by Cisco Unified MeetingPlace H.323/SIP IP Gateway to connect callers to the Cisco Unified MeetingPlace Audio Server system.
- One of the following applications to route IP calls to the IP-gateway server:

- Cisco Unified Communications Manager
- Cisco SIP Proxy Server
- Cisco Gateway

Cisco Unified MeetingPlace H.323/SIP IP Gateway performs IP call setup and tear down for the Cisco Unified MeetingPlace Audio Server system.

Note: If you are using an IP PBX that runs standard H.323 or SIP call control, see the About Configuring Cisco Unified MeetingPlace H.323/SIP IP Gateway page for the required system settings and see your IP PBX documentation for information about how to configure these settings.

Cisco Unified MeetingPlace H.323/SIP IP Gateway

IP telephony uses your data network infrastructure to transmit voice packets. The underlying technology that is used by IP telephony applications is Voice over IP (VoIP), which enables different types of endpoints-IP phones, PSTN phones, and H.323 clients, for example-to communicate over your network.

The following sections provide information about VoIP concepts and how they relate to the Cisco Unified MeetingPlace H.323/SIP IP Gateway software:

- Standards That are Supported by Cisco Unified MeetingPlace H.323/SIP IP Gateway
- Protocols That Cisco Unified MeetingPlace H.323/SIP IP Gateway Uses
- Dual Tone Multi-Frequency Support by Cisco Unified MeetingPlace H.323/SIP IP Gateway
- Audio Quality During a Cisco Unified MeetingPlace Meeting

Standards That are Supported by Cisco Unified MeetingPlace H.323/SIP IP Gateway

Cisco Unified MeetingPlace H.323/SIP IP Gateway Release 5.3 supports the following networking and telephony standards:

- H.323
- SIP
- RTP
- Codec G.711 alaw and ulaw (64 kbps) and G.729a (8 kbps)

  Note: By default, G.729a is not enabled, and G711 codec calls are negotiated first. For more information about assigning codec preferences, see Details of Technician Commands information about the setipcodec command.

Protocols That Cisco Unified MeetingPlace H.323/SIP IP Gateway Uses

Protocols are rules that endpoints follow for sending and receiving messages, checking errors, and compressing data. Cisco Unified MeetingPlace H.323/SIP IP Gateway Release 6.0 uses the following protocols to transmit data throughout the Cisco Unified MeetingPlace system:

Protocol	Description
H.323	The protocol that is responsible for communication between Cisco Unified Communications Manager and the Cisco Unified MeetingPlace H.323/SIP IP Gateway. The protocol suite, which extends H.225 for call signaling and H.245 for data transfer, is used in the successful acceptance and media exchange of data.
Session Initiation Protocol (SIP)	A call-control protocol that supports all existing functionality that is available to a Cisco IP phone. Cisco Unified MeetingPlace H.323/SIP IP Gateway Release 5.3 complies with RFC 3261 and RFC 3515 specifications and interoperates with the following endpoints: • Cisco SIP Proxy Server environment • Cisco 7960 and Cisco 7940 SIP IP phones • Cisco IP/Videoconferencing Multipoint Control Unit (IP/VC MCU) • Microsoft Real-Time Communications (RTC) Server for integration with Windows XP Messenger
Real-Time Transport Protocol (RTP)	An Internet protocol responsible for the transmission of real-time data, such as video and audio. Generally, RTP runs on top of User Datagram Protocol (UDP) but can also be supported by other transport protocols. For Cisco Unified MeetingPlace H.323/SIP IP Gateway, RTP is responsible for carrying the G.711 and G.729a encoded data. G.711 is a standard 64 kbps codec, and G.729a is an 8 kbps codec. Both codecs offer quality audio transmission over high-speed connections.
Skinny Station Protocol (SSP)	A protocol that is used to establish connections, locate resources, forward data, and handle flow control and error recovery, which enable a Cisco IP phone to notify Cisco Unified Communications Manager of its ability to place and receive calls.
Cisco Unified MeetingPlace Gateway System Integrity Manager (SIM)	A messaging service that enables NT services on the IP-gateway server to communicate directly with the Cisco Unified MeetingPlace system.

Dual Tone Multi-Frequency Support by Cisco Unified MeetingPlace H.323/SIP IP Gateway

Dual Tone Multi-Frequency (DTMF) is a signaling method that allocates a specific pair of frequencies to each key on a touch-tone telephone. Various Cisco Unified MeetingPlace Audio Server system functions are invoked when callers press touch-tone keys in certain combinations. For example, the #5 key combination enables callers to mute and unmute their phones during a meeting.

PSTN phones use in-band DTMF, which embeds the tone in the audio stream. Although in-band DTMF is efficient, it cannot carry DTMF signals reliably when a voice compression codec is used.

H.323 clients can use out-of-band DTMF, which carries digitized information on a separate data channel and sends this information directly to Cisco Unified MeetingPlace H.323/SIP IP Gateway. Because out-of-band DTMF does not require that the tone be deciphered, distortion and signal loss are minimal.

The Cisco Unified MeetingPlace system also supports RFC 2833: DTMF signals can be sent in the RTP

stream by using packets designed to carry the signal characteristics. The DTMF signal is not embedded in the media and, therefore, does not suffer signal loss due to audio compression.

Cisco Unified MeetingPlace H.323/SIP IP Gateway handles both in-band and out-of-band DTMF for H.323 configurations. Out-of-band digit detection is not supported for SIP configurations.

Audio Quality During a Cisco Unified MeetingPlace Meeting

The audio quality during a meeting depends upon the architecture of your network. Severe demands on bandwidth, overloading, and latency cause dropped packets, resulting in broken audio, congestion, and disruption of service.

In general, a switched-100 Mbps network handles VoIP traffic efficiently. To alleviate potentially disruptive service and to improve audio quality, consider implementing class of service (CoS) and quality of service (QoS).

When the server handles over 400 ports of IP calls, voice quality degradation can occur because of network congestion. CoS is a technology that helps manage network traffic by assigning a class to similar types of traffic and assigning a priority to each class. Typically in a VoIP environment, voice traffic is set to a high priority while data traffic is set to a low priority, and CoS makes a best effort to provide QoS by managing traffic based upon the assigned class and priority.

Cisco Unified MeetingPlace H.323/SIP IP Gateway implements IP Precedence Level 5 CoS for voice traffic. If your network is set to use this CoS, the resulting QoS maximizes audio quality during your meetings.

Note: Cisco Unified MeetingPlace H.323/SIP IP Gateway does not support sending Layer 2 QoS or CoS; therefore, you cannot set priorities at the Layer 2 switch level.

Endpoints That are Supported by Cisco Unified MeetingPlace H.323/SIP IP Gateway

Cisco Unified MeetingPlace H.323/SIP IP Gateway integrates easily with existing networks to host Cisco Unified MeetingPlace meetings for users through the following supported endpoints:

- Cisco IP Phones
- Cisco SIP IP Phones
- H.323 clients, such as Microsoft NetMeeting
- PSTN phones through a voice gateway

How PSTN and Cisco IP Phones Communicate by Using Cisco Unified MeetingPlace H.323/SIP IP Gateway

When a call is placed from a PSTN phone to a Cisco IP phone, the call is routed through a voice gateway, which is the demarcation point where the circuit-switched voice network meets the packet-switched data network. The primary responsibility of the voice gateway is to ensure that PSTN voice traffic reaches the

data network and vice versa. You can use the voice gateway to forward an IP or PSTN call to its opposing network through Cisco Unified Communications Manager or a PBX.

When a call is placed from an Cisco IP phone, it is routed to Cisco Unified Communications Manager, which is responsible for setting up the call, directing the call to the called device, and sending network information-such as the IP address, UDP port number, and communication capabilities of the called device-to the Cisco IP phone. After receiving the information, the Cisco IP phone sends its digitized voice traffic directly to the called device.

The following steps describe how Cisco IP phones and PSTN phones use Cisco Unified MeetingPlace H.323/SIP IP Gateway to access the Cisco Unified MeetingPlace Audio Server system, as shown in Figure: Cisco IP Phones and PSTN Phones Using Cisco Unified MeetingPlace H.323/SIP IP Gateway Software to Access the Cisco Unified MeetingPlace Audio Server System.

Figure: Cisco IP Phones and PSTN Phones Using Cisco Unified MeetingPlace H.323/SIP IP Gateway Software to Access the Cisco Unified MeetingPlace Audio Server System

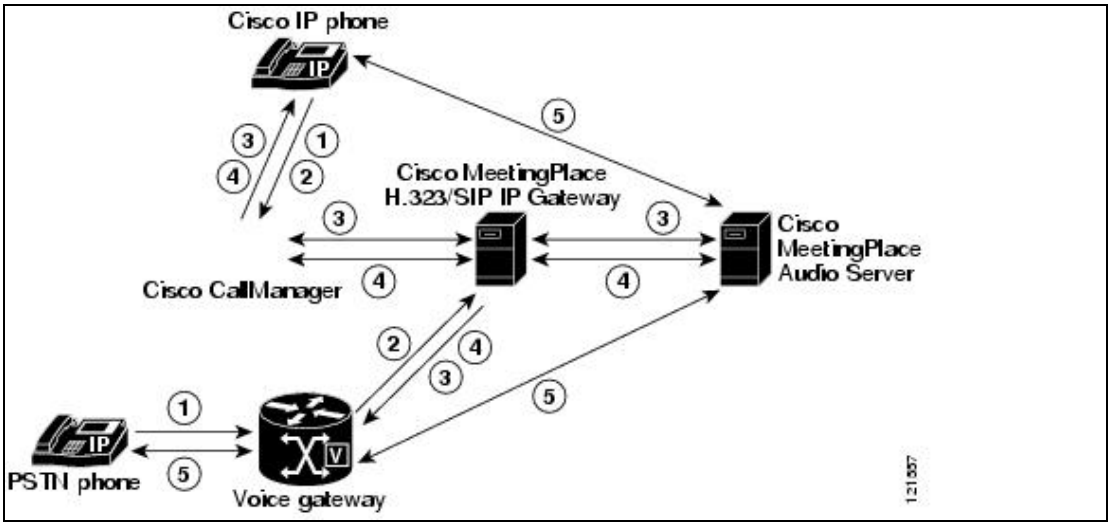

Step	Cisco IP Phone Description	PSTN Phone Description
1.	On the Cisco IP phone dial pad, the caller enters a dialable number to the Cisco Unified MeetingPlace Audio Server system that will host the meeting.	By using a PSTN phone, the caller dials the number to the voice gateway.
2.	The call is immediately routed by using SSP to Cisco Unified Communications Manager.	The voice gateway routes the call to Cisco Unified Communications Manager.
3.	Cisco Unified Communications Manager and Cisco Unified MeetingPlace H.323/SIP IP Gateway communicate by using H.323. This communication process involves H.225 for call signaling and H.245 for media exchange. See Notes for Step 3, below.	Cisco Unified Communications Manager examines its routing table to resolve the dialed number with the IP address of the IP-gateway server. Cisco Unified Communications Manager and Cisco Unified MeetingPlace H.323/SIP IP Gateway communicate by using H.323. This communication process involves H.225 for call signaling and H.245 for media exchange.

		See Notes for Step 3, below.
4.	Cisco Unified Communications Manager and Cisco Unified MeetingPlace H.323/SIP IP Gateway exchange the IP address and UDP port number of the Cisco IP phone or voice gateway and the Cisco Unified MeetingPlace Audio Server system. • Cisco Unified Communications Manager sends the IP address and UDP port number of the Cisco Unified MeetingPlace Audio Server system to the Cisco IP phone or voice gateway. • Cisco Unified MeetingPlace H.323/SIP IP Gateway sends the IP address and UDP port number of the Cisco IP phone or voice gateway to the Cisco Unified MeetingPlace Audio Server system.	Same as for Cisco IP Phone.
5.	After codec information, IP address, and UDP port number are received, the Cisco IP phone or voice gateway uses the information to send voice traffic directly to the Cisco Unified MeetingPlace Audio Server system. The Cisco IP phone or voice gateway is connected to the Cisco Unified MeetingPlace Audio Server system after each device exchanges data.	Same as for Cisco IP Phone.

Notes for Step 3:

- Cisco Unified Communications Manager and Cisco Unified MeetingPlace H.323/SIP IP Gateway use H.225 to determine if the Cisco Unified MeetingPlace Audio Server system can accept the call. By using Cisco Unified MeetingPlace GWSIM, Cisco Unified MeetingPlace H.323/SIP IP Gateway communicates directly with the Cisco Unified MeetingPlace Audio Server system to determine its availability.
- If the Cisco Unified MeetingPlace Audio Server system is unavailable, Cisco Unified MeetingPlace H.323/SIP IP Gateway informs Cisco Unified Communications Manager, and the caller hears a fast busy signal.
- If the call is accepted, Cisco Unified Communications Manager and Cisco Unified MeetingPlace H.323/SIP IP Gateway use H.245 to negotiate which codec will carry the voice activity. Cisco Unified MeetingPlace H.323/SIP IP Gateway uses G.711 or G.729a to carry the encoded speech.
- Once codec negotiation is complete, Cisco Unified MeetingPlace H.323/SIP IP Gateway uses the Gateway SIM to retrieve an IP address and UDP port number from the Cisco Unified MeetingPlace Audio Server system. This IP address and UDP port number provide access to the meeting.

How H.323 Clients and Cisco SIP IP Phones Communicate by Using Cisco Unified MeetingPlace H.323/SIP IP Gateway

H.323 clients and Cisco SIP IP phones-which can be simultaneously deployed-communicate with Cisco Unified MeetingPlace H.323/SIP IP Gateway and provide another option to join a Cisco Unified MeetingPlace meeting.

Figure: Cisco IP Phones and PSTN Phones Using Cisco Unified MeetingPlace H.323/SIP IP Gateway Software

The following steps describe how H.323 devices and Cisco SIP IP phones access the Cisco Unified MeetingPlace Audio Server system by using Cisco Unified MeetingPlace H.323/SIP IP Gateway.

Figure: H.323 Device and Cisco SIP IP Phone Using Cisco Unified MeetingPlace H.323/SIP IP Gateway Software to Access the Cisco Unified MeetingPlace Audio Server System

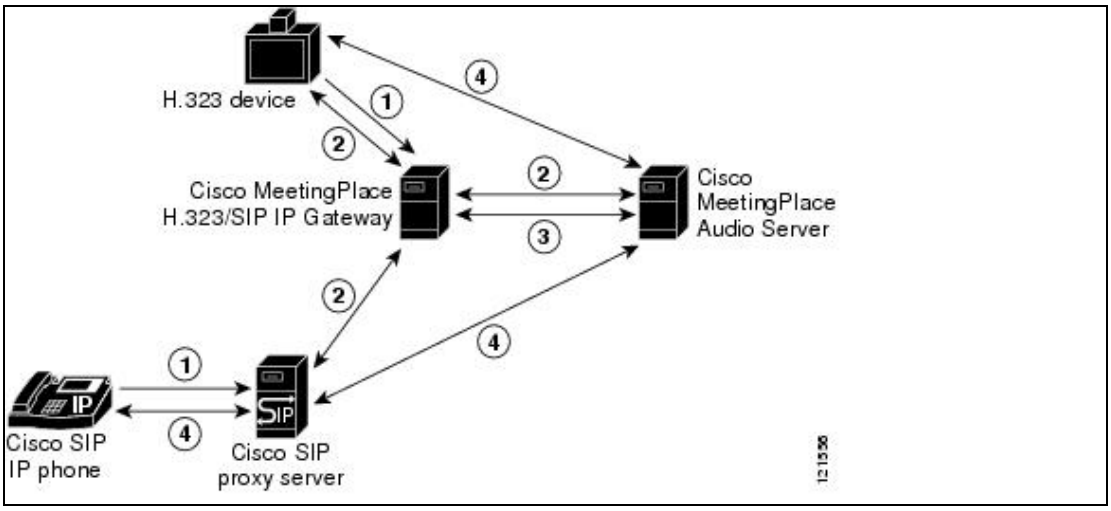

Step	H.323 Device Description	Cisco SIP IP Phone Description
1.	A caller places a call from an H.323 device interface.	A caller places a call from a Cisco SIP IP phone.
2.	The H.323 device and Cisco Unified MeetingPlace H.323/SIP IP Gateway communicate by using H.323. See Notes for Step 2, below.	The Cisco SIP IP phone through Cisco SIP Proxy Server and Cisco Unified MeetingPlace H.323/SIP IP Gateway communicate by using SIP. See Notes for Step 2, below.
3.	The H.323 device or Cisco SIP IP phone and Cisco Unified MeetingPlace H.323/SIP IP Gateway exchange IP addresses and UDP port numbers. • Cisco Unified MeetingPlace H.323/SIP IP Gateway sends the IP address and UDP port number of the Cisco Unified MeetingPlace Audio Server system to the H.323 device or Cisco SIP IP phone. • Cisco Unified MeetingPlace H.323/SIP IP Gateway sends the IP address and UDP port number of the H.323 device or Cisco SIP IP phone to the Cisco Unified MeetingPlace Audio Server system.	Same as for H.323 device.
4.	After codec information, IP address, and UDP port number of the Cisco Unified MeetingPlace Audio Server system are received, the H.323 device or Cisco SIP IP phone uses the information to send voice traffic directly to the Cisco Unified MeetingPlace Audio Server system. The H.323 device or Cisco SIP IP phone is connected to the Cisco Unified MeetingPlace Audio Server system after each device	Same as for H.323 device.

	exchanges data.	

Notes for Step 2:

- The H.323 device or Cisco SIP IP phone and Cisco Unified MeetingPlace H.323/SIP IP Gateway determine if the Cisco Unified MeetingPlace Audio Server system can accept the call. By using the Gateway SIM, the Cisco Unified MeetingPlace H.323/SIP IP Gateway communicates directly with the Cisco Unified MeetingPlace Audio Server system to determine its availability.
- If the Cisco Unified MeetingPlace Audio Server system is unavailable, Cisco Unified MeetingPlace H.323/SIP IP Gateway informs the H.323 device or Cisco SIP IP phone, and depending upon system configuration, callers may hear a message informing them that the call cannot be accepted.
- If the call is accepted, the H.323 device or Cisco SIP IP phone and Cisco Unified MeetingPlace H.323/SIP IP Gateway negotiate which codec will carry the voice activity. Cisco Unified MeetingPlace H.323/SIP IP Gateway uses G.711 or G.729a to carry the encoded speech.
- Once codec negotiation is complete, Cisco Unified MeetingPlace H.323/SIP IP Gateway retrieves an IP address and UDP port number from the Cisco Unified MeetingPlace Audio Server system by using Gateway SIM. This IP address and UDP port number provide access to the meeting.

Additional References for Working with Cisco Unified MeetingPlace H.323/SIP IP Gateway Software

See to the following documents for additional information:

- Cisco Unified Communications Manager documentation for your release

  http://www.cisco.com/univercd/cc/td/doc/product/voice/c_callmg/index.htm

- Cisco SIP Proxy Server documentation for your release

  http://www.cisco.com/univercd/cc/td/doc/product/voice/sipproxy/index.htm