Cisco Unified MeetingPlace Web Conferencing provides real-time collaboration functionality to an organization's intranet and extranet, and integrates Cisco Unified MeetingPlace with a web server, thus providing users with a browser-based interface. Cisco Unified MeetingPlace Web Conferencing enables Windows, Mac, Linux, and UNIX users to schedule and attend conferences, access meeting materials, and collaborate on documents from common web browsers, such as Microsoft Internet Explorer, Mozilla Firefox, and Apple Safari.

This section provides information about the following Cisco Unified MeetingPlace Web Conferencing concepts:

- Overview of Cisco Unified MeetingPlace Web Conferencing Components
- Benefits of Cisco Unified MeetingPlace Web Conferencing
- Overview of the Cisco MeetingPlace Agent Service

Contents

- 1 Overview of Cisco Unified MeetingPlace Web Conferencing Components
  - 1.1 Table: Cisco Unified MeetingPlace Web Conferencing Components
- 2 Benefits of Cisco Unified MeetingPlace Web Conferencing
  - 2.1 Common Endpoints
  - 2.2 Server-Based Conferencing
  - 2.3 Increased Reliability
  - 2.4 Network Security
- 3 Overview of the Cisco MeetingPlace Agent Service
- 4 How Users Connect to Cisco Unified MeetingPlace Web Conferencing
  - 4.1 Figure: How Users Communicate with Cisco Unified MeetingPlace Web Conferencing
- 5 How Cisco Unified MeetingPlace Web Conferencing Fulfills Requests
  - 5.1 Figure: Cisco Unified MeetingPlace Web Conferencing Components

Overview of Cisco Unified MeetingPlace Web Conferencing Components

Cisco Unified MeetingPlace Web Conferencing is implemented by using a combination of technologies, including the following:

- Hypertext Markup Language (HTML)
- JavaScript
- Adobe Flash
- Internet Server Application Program Interface (ISAPI)
- Windows services
- ASP.NET

Table: Cisco Unified MeetingPlace Web Conferencing Components describes the Cisco Unified

MeetingPlace Web Conferencing components, which work with the Cisco Unified MeetingPlace Audio Server system and the Cisco IPVC Multipoint Control Unit (MCU) to fulfill user requests and deliver functionality.

Table: Cisco Unified MeetingPlace Web Conferencing Components

Component	Description
Cisco Unified MeetingPlace Agent Service	Maintains a constant connection between the web server and the Audio Server system. Priority = Normal (8). For more information, see the Overview of the Cisco MeetingPlace Agent Service section.
Cisco Unified MeetingPlace Audio Service	Converts Cisco Unified MeetingPlace Voice (.mpv) files. Priority = Normal (8). For more information, see About Audio File Conversion.
Cisco Unified MeetingPlace Connect Application Service	Performs meeting load balancing functions and sends commands and events from the meeting room to other Cisco Unified MeetingPlace components. Priority = Normal (8).
Cisco Unified MeetingPlace Connect Gateway	Receives commands and events from the Agent Service and translates them into meeting room activity. Priority = Normal (8).
Cisco Unified MeetingPlace Flash Media Administration Server	Auxiliary service that provides web-conferencing capability. Priority = Normal (8).
Cisco Unified MeetingPlace Flash Media Server	Serves the web-conferencing meeting room client to end-users. Priority = Normal (8).
Cisco Unified MeetingPlace Replication Service	Synchronizes the local web server database with that of the Audio Server system. Priority = Low (4). For more information, see About the Replication Service.
Cisco MeetingPlace Video Service (optional)	Provides video conference integration by communicating with Cisco Unified MeetingPlace Video Administration, the Audio Server system, and the web server.
Cisco Unified MeetingPlace Web Conferencing	Priority = Normal (8).

All of these services are controlled by a master service called the Cisco MeetingPlace Web Conferencing Service. For information about this service, see About the Web Conferencing Service.

Benefits of Cisco Unified MeetingPlace Web Conferencing

As part of an integrated rich-media conferencing solution, Cisco Unified MeetingPlace Web Conferencing provides four key benefits, which are described in the following sections:

- Common Endpoints
- Server-Based Conferencing
- Increased Reliability
- Network Security

Common Endpoints

Cisco Unified MeetingPlace Web Conferencing includes a Flash-based endpoint called the meeting console, which facilitates participation in Cisco Unified MeetingPlace web conferences. The meeting console is automatically loaded on the web browsers of users as soon as they join their meetings. Users can download the Cisco Unified Presenter Add-in to share their desktop or to upload and share documents and presentations from their desktop.

The use of these common endpoints allows meeting attendees to view any document being shared by the host regardless of whether they have the applications installed on their PCs. For example, if the host shares an Excel spreadsheet, all attendees are able to view the shared spreadsheet. If the host enables collaboration of the shared document, all attendees can then take control of the shared application and modify its contents-regardless of whether they have Excel installed.

Server-Based Conferencing

Cisco Unified MeetingPlace Web Conferencing takes advantage of server-based conferencing, which connects each user directly to the web server. To access a web conference, users either sign in through the Cisco Unified MeetingPlace Web Conferencing home page by using their user ID, user password, and meeting ID, or click the click-to-attend link in their meeting notification. Either action launches the meeting console, which connects users to their meeting. Because of server-based conferencing, users do not need to know the IP addresses of other PCs to connect.

Increased Reliability

Cisco Unified MeetingPlace Web Conferencing not only makes scheduling and attending meetings easy, but also increases the reliability of a meeting for the following reasons:

- The web server continues to host conferences even if an individual user's system crashes.
- Typically, the web server is a powerful system that can support a higher volume of transactions than a user's PC.
- You can locate the web server in the server room for redundant power backup.
- You can deploy multiple web servers in clusters to provide web conferencing load balancing and redundancy. For more information on load balancing, see Installing Web Conferencing in a Load Balancing Configuration.

Network Security

Cisco Unified MeetingPlace Web Conferencing provides increased network security when conducting web conferences with users outside your organization for the following reasons:

- Because the web server provides a central point of connection, you need only to provide inbound network access to one server rather than to all desktops in your organization.
- You can install Web Conferencing on an external web server with attend-only capability and deploy it in a publicly accessible network, such as in a demilitarized zone (DMZ). For more information on segmented meeting access deployments, see Configuring External Access to Web Conferencing.
- Web Conferencing supports Secure Sockets Layer (SSL), which allows the web server to send and receive encrypted data over your network. For more information on SSL, see How to Configure Secure Sockets Layer.

Locking down Microsoft web servers by using the Microsoft Lockdown Utility is an increasingly popular way to close potential security holes. The Cisco MCS operating system used with Cisco Unified MeetingPlace Web Conferencing is already locked down. If you are using a legacy, non-Cisco MCS server, see the release note or readme file for the latest Cisco MCS OS to identify supported security settings.

Overview of the Cisco MeetingPlace Agent Service

The Cisco MeetingPlace Agent service maintains a constant connection between the web server and the Cisco Unified MeetingPlace Audio Server system. If you have Cisco Unified MeetingPlace Video Integration installed, the Agent service also acts as a communicator between the Audio Server system and the Video service.

The Agent service processes all user-invoked transactions, including the following:

- Scheduling and attending meetings
- Managing profile information
- Requesting lists of meetings to which a user is invited

This section provides the following information:

- How Users Connect to Cisco Unified MeetingPlace Web Conferencing
- How Cisco Unified MeetingPlace Web Conferencing Fulfills Requests

How Users Connect to Cisco Unified MeetingPlace Web Conferencing

Users connect to the Cisco Unified MeetingPlace Web Conferencing home page to sign in, schedule or find meetings to attend, and update their profile settings. This connection uses the primary IP address (or hostname) configured on the Web Conferencing server and port 80.

When a meeting is scheduled to begin, the Cisco MeetingPlace Agent Service instructs the web engine to initiate the meeting. As users join the web component of the meeting, the Flash-based meeting console is downloaded on their desktops, allowing them to connect to the Flash Media Server running on the Web Conferencing system by using the secondary IP address (or hostname) configured on the server.

The meeting console communicates with the Flash Media Server on the Web Conferencing server through TCP port 1627, as shown in Figure: How Users Communicate with Cisco Unified MeetingPlace Web Conferencing. If this port is blocked due to a firewall, the Flash client establishes a tunnel connection over HTTP through port 80. This process allows the meeting console to bypass firewall restrictions so that external users can participate in web conferences.

Note for systems that have a load-balanced configuration: Stopping the Flash Media Server on one Web Conferencing server restarts the Connect Application Service on all Web Conferencing servers in a cluster setup. This causes web failover to fail. This is a known issue.

For more information on allowing external access to Cisco Unified MeetingPlace web conferences, see Configuring External Access to Web Conferencing.

The web server also supports tunneling over HTTPS by using Secure Sockets Layer (SSL). For more information about SSL, see How to Configure Secure Sockets Layer.

Figure: How Users Communicate with Cisco Unified MeetingPlace Web Conferencing

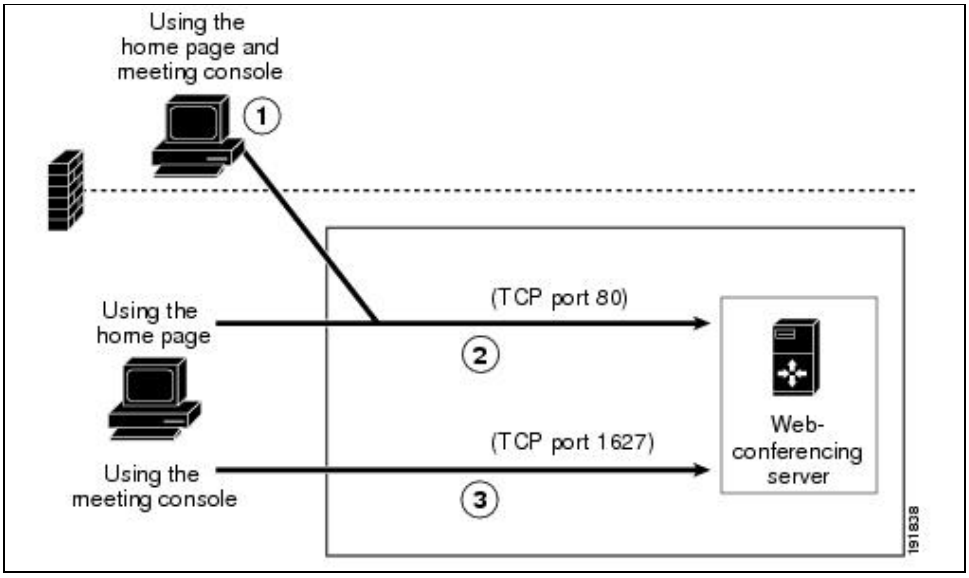

1. For external participants, the meeting console tunnels communication by using HTTP through TCP port 80.
2. Cisco Unified MeetingPlace Web Conferencing home page traffic (signing on, scheduling meetings, changing profile settings, etc.) for both internal and external participants uses port 80.
3. For internal participants using the meeting console, connection is made directly to the web server over TCP port 1627.

If you prioritize your Cisco Unified MeetingPlace Web Conferencing traffic using QoS, we recommend that you mark this traffic as DSCP/PHB 34/AF41. For more information about QoS design recommendations for Cisco Unified MeetingPlace, see the Solutions Reference Network Design (SRND) guide at http://www.cisco.com/go/srnd.

How Cisco Unified MeetingPlace Web Conferencing Fulfills Requests

Figure: Cisco Unified MeetingPlace Web Conferencing Components shows how Cisco Unified MeetingPlace Web Conferencing components work together to fulfill user requests.

Figure: Cisco Unified MeetingPlace Web Conferencing Components

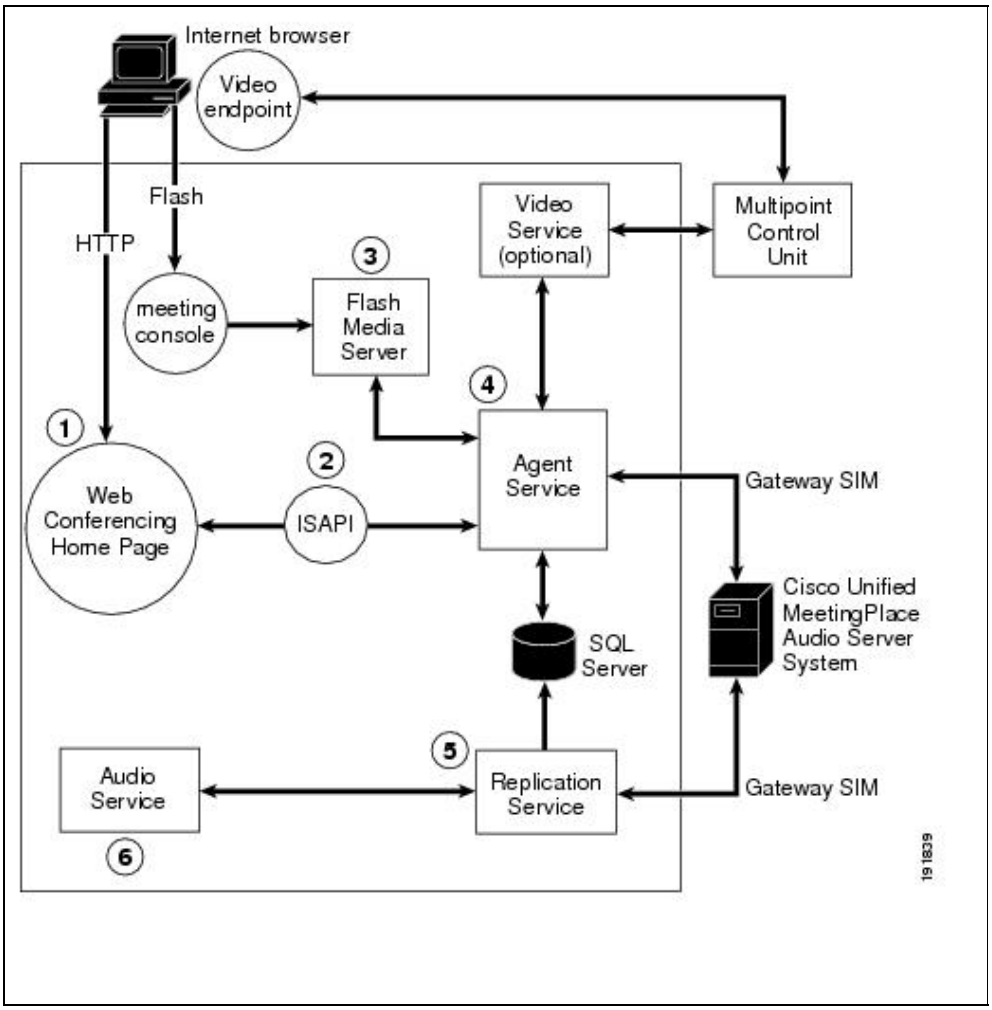

1. Users submit requests to schedule meetings, change their profile, and join meetings.
2. ISAPI processes user requests for the Cisco MeetingPlace Agent Service and generates HTML pages to display to users for meeting scheduling, meeting details, and account update pages.
3. When users join a meeting, their meeting consoles connect to the Flash Media Server on the Cisco Unified MeetingPlace Web Conferencing server.
4. The Agent Service manages all user requests from ISAPI and accomplishes the following:

- Passes the scheduling requests and profile updates to the Cisco Unified MeetingPlace Audio Server system.
- Coordinates between the meeting room components (Connect Gateway, Connect Application Service, Flash Media Administration Server, and Flash Media Server) and the rest of the Cisco Unified MeetingPlace system.
- Acts as a communication channel between the Audio Server system and the Video Service.
- Retrieves and stores information in the MPWEB database.
- For more information about the Agent Service, see the Overview of the Cisco MeetingPlace Agent Service section.

5. The Replication Service copies meeting materials from the Audio Server system and stores them on the web server. Pointers to the data are kept in an SQL Server database. The Replication Service also forwards voice recordings to the Audio Service for file conversion. For more information about the Replication Service, see the About the Replication Service.
6. The Audio Service converts voice recordings and passes the converted files back to the Replication Service. For more information about the Audio Service, see About Audio File Conversion.

Cisco Unified MeetingPlace, Release 6.x > Web Conferencing > About Web Conferencing